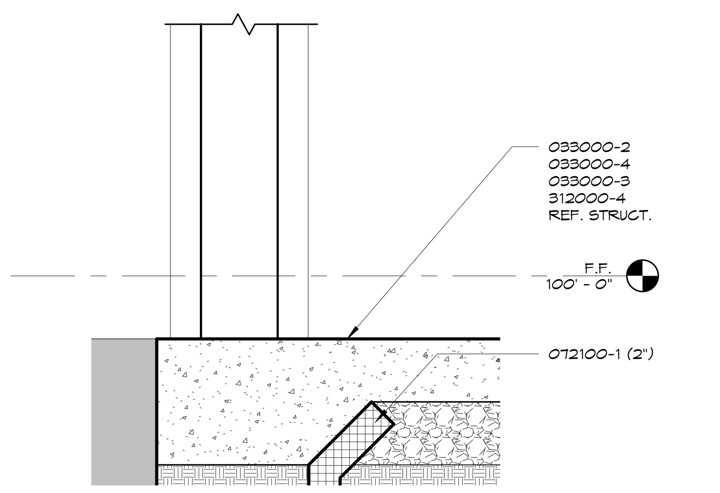

1 WALL BASE AT VEST. 103
1 1/2" = 1'-0"

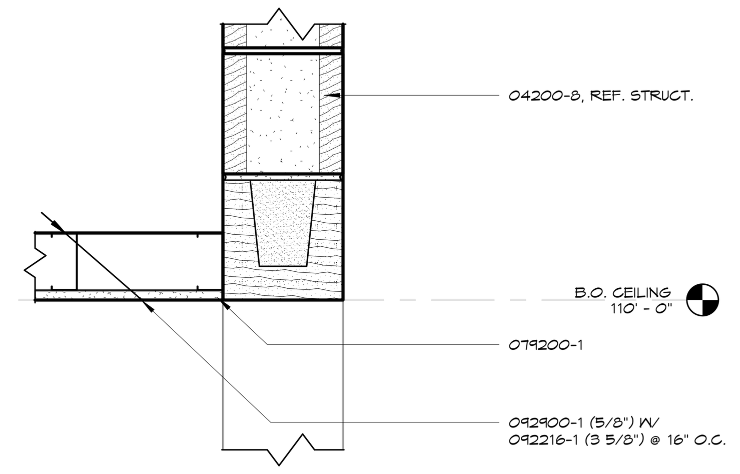

2 MASONRY SOFFIT AT GYM
1 1/2" = 1'-0"

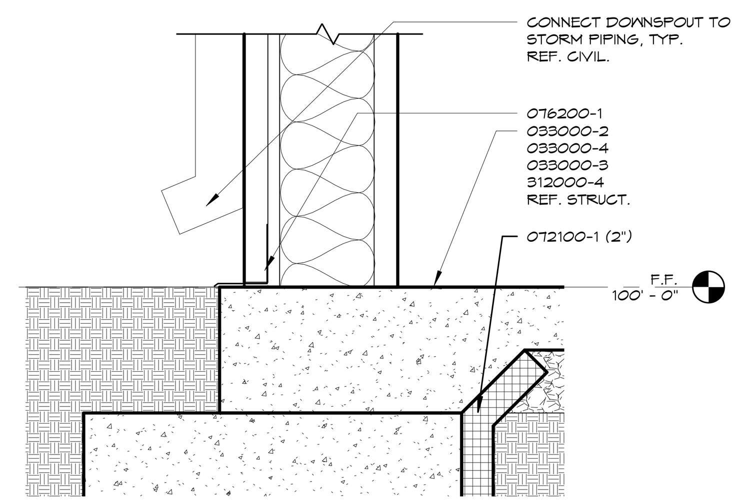

3 EXT. WALL BASE AT STORAGE
1 1/2" = 1'-0"

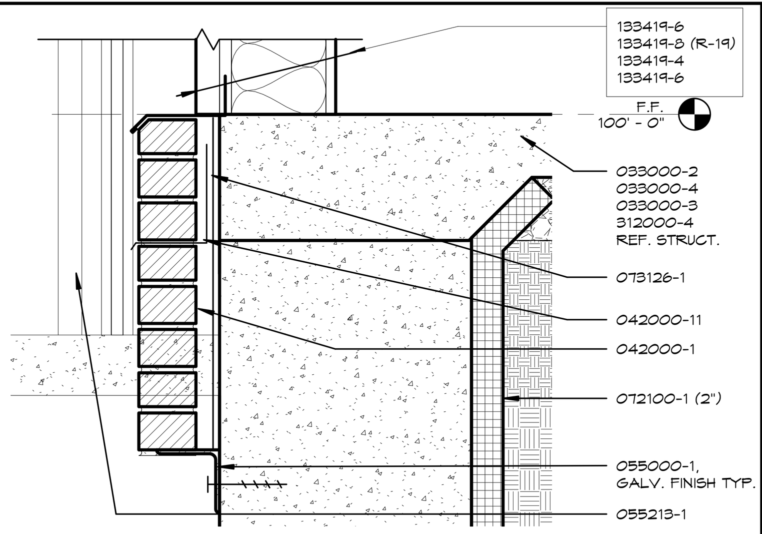

4 WALL BASE DETAIL AT LOBBY
1 1/2" = 1'-0"

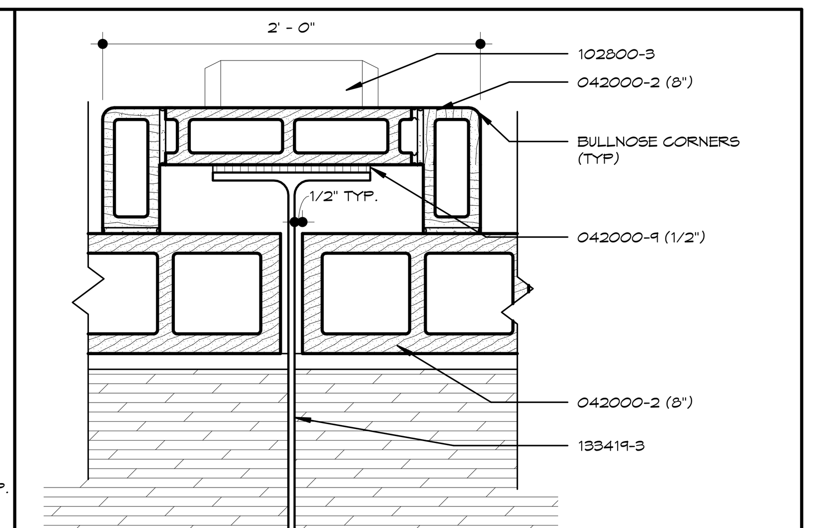

5 CMU COLUMN WRAP
1 1/2" = 1'-0"

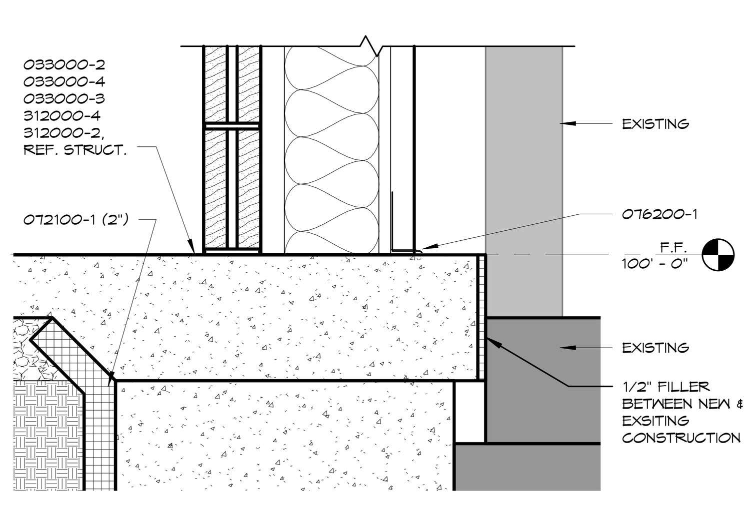

6 WALL BASE DETAIL AT MENS
1 1/2" = 1'-0"

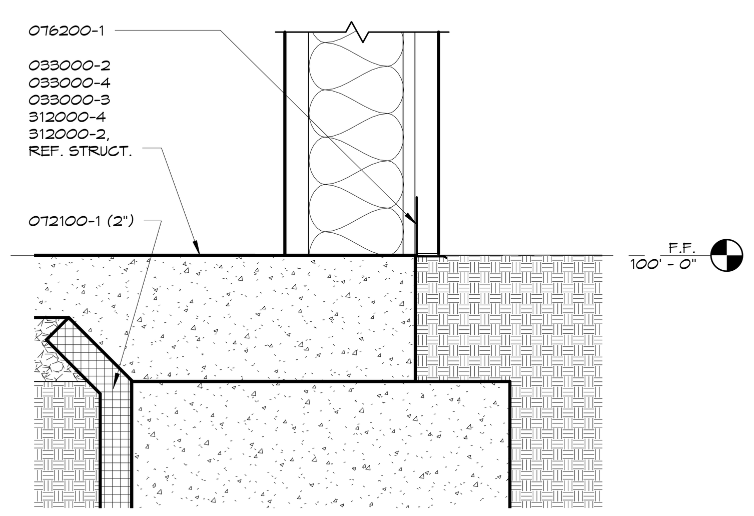

7 WALL BASE DETAIL AT STOR. 106
1 1/2" = 1'-0"

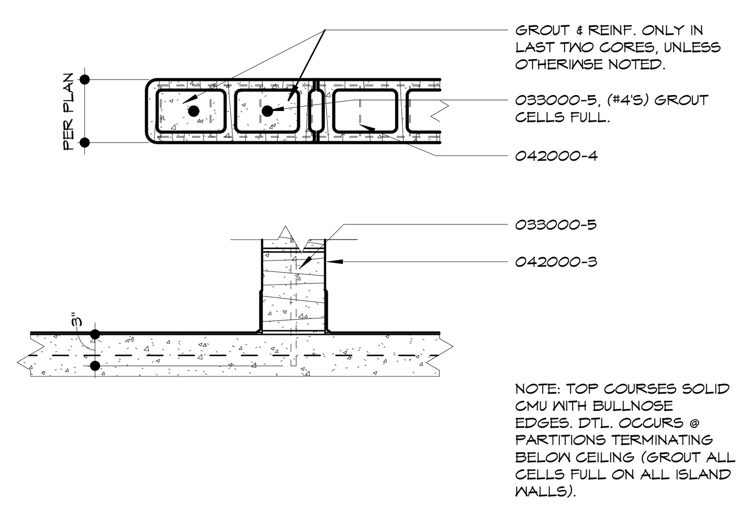

8 MASONRY WALL REINFORCING
1" = 1'-0"

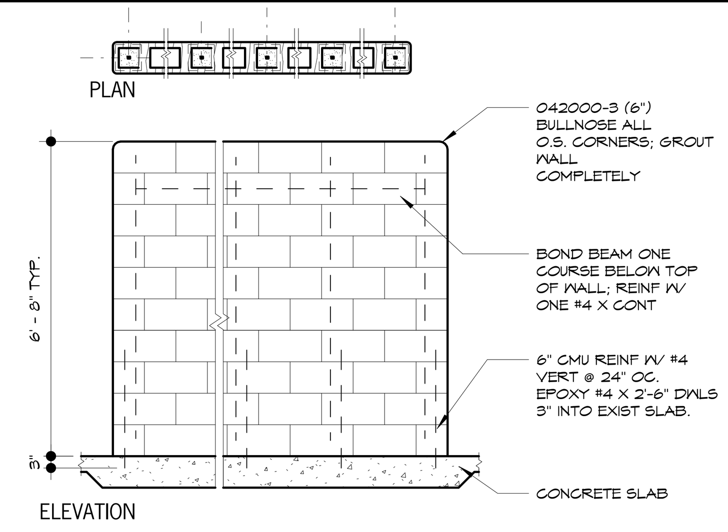

9 SCREEN WALL @ SHOWER
3/8" = 1'-0"

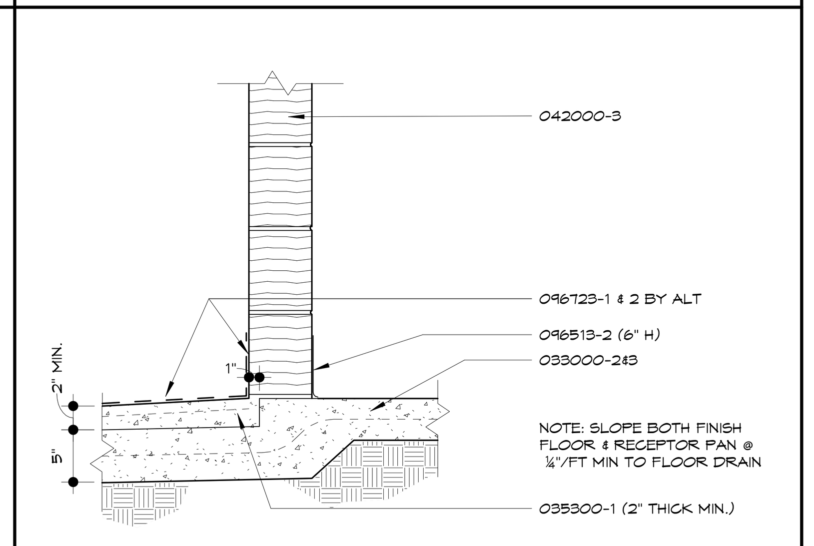

10 SHOWER RECEPTOR
1" = 1'-0"

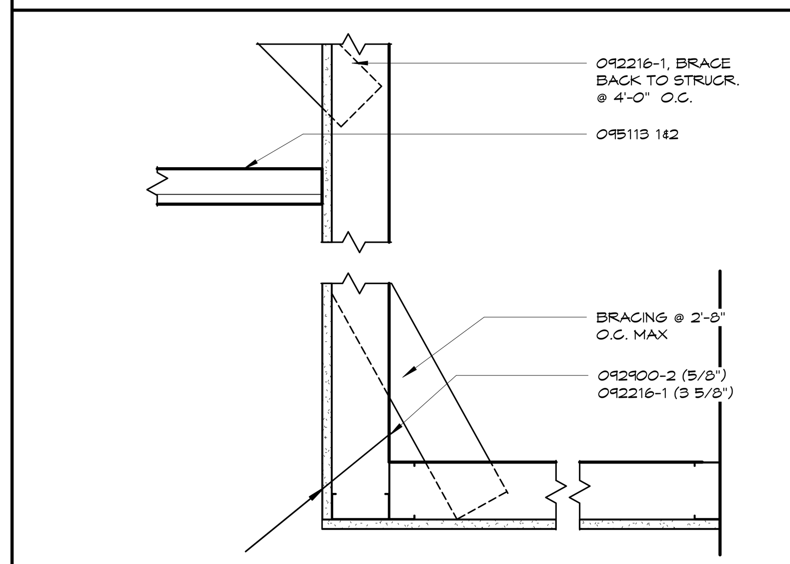

11 GYP BD SOFFIT / CLG DROP
1 1/2" = 1'-0"

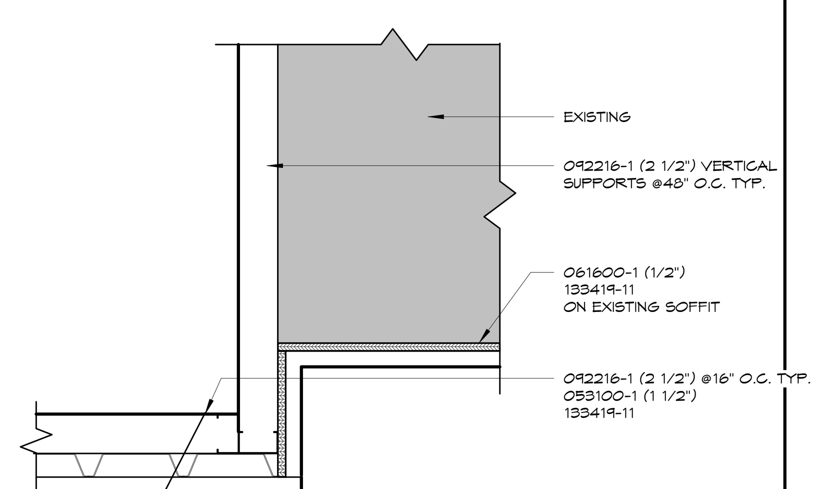

12 ENTRY SOFFIT DETAIL
1 1/2" = 1'-0"

KEYNOTES

Note: Keynotes are drawn from a master list & may not be sequentially numbered. Sizes (Ex: 2x4) or other info. following keynote on drawings indicates criteria for those materials/locations which may differ from std. material specified.

033000	-1	CONCRETE STRUCTURE
	-2	CONCRETE FLOOR SLAB
	-3	VAPOR BARRIER
	-4	WELDED WIRE FABRIC
	-5	STEEL REINFORCING BAR
	-6	RUSTICATION JOINT
	-7	WATERSTOP
	-8	DOVETAIL ANCHOR
	-9	SIDEWALK
	-10	PREMOLDED JOINT FILLER
042000	-1	FACE BRICK
	-2	CONCRETE MASONRY UNIT-NORMAL WEIGHT (")
	-3	CONCRETE MASONRY UNIT- LIGHTWEIGHT (")
	-4	WIRE REINFORCING
	-5	METAL TIE/ANCHOR
	-6	THROUGH WALL FLASHING
	-7	CONTROL JOINT STRIP
	-8	BOND BEAM (")
	-9	COMPRESSIBLE FILLER
	-10	WEEP HOLE/VENT
	-11	CAVITY DRAINAGE MATERIAL
	-12	TERMINATION BAR
051200	-1	STEEL BEAMS
	-2	STEEL COLUMN
	-3	STEEL TUBE
	-4	STEEL CHANNEL
052100	-1	STEEL JOIST
	-2	JOIST - EXTENDED END
	-3	JOIST - CEILING EXTENSION
053100	-1	METAL DECKING
	-2	FLEXIBLE CLOSURE STRIPS
	-3	STEEL COMPOSITE DECKING
054000	-1	STRUCTURAL STEEL STUDS
	-2	STRUCTURAL STEEL JOISTS
	-3	"C" CLOSURE
055000	-1	STEEL ANGLE
	-4	STEEL CHANNEL
	-5	STEEL LINTEL
	-6	STEEL PIPE
	-7	STEEL TUBE
	-8	STEEL PLATE
	-9	STEEL LADDER
	-10	STEEL SIDEWALK TRENCHDRAIN COVER
055100	-1	STEEL STAIRS
	-2	STEEL STAIR STRINGER
	-3	STEEL EMBED PLATE
055213	-1	STEEL PIPE HANDRAIL
	-2	STEEL PIPE GUARDRAIL
	-3	STEEL HANDRAIL WALL BRACKET
	-4	STEEL TUBE HANDRAIL
	-5	STEEL TUBE GUARDRAIL
061000	-1	2X WOOD NAILER (")
	-2	2X WOOD BLOCKING (")
	-3	1X WOOD CONTINUOUS (")
	-4	PLYWOOD (")
	-5	#30 FELT
	-6	#15 FELT
	-7	ORIENTED STRAND BOARD (")
061600	-1	SHEATHING
	-2	FIBERGLASS SHEATHING
	-3	#15 FELT
	-4	#30 FELT
	-5	PLYWOOD (")
	-6	ORIENTED STRAND BOARD (") DAMPPROOFING
071326	-1	SELF-ADHERING SHEET WATERPROOFING
072100	-1	FOUNDATION WALL OR UNDER SLAB INSULATION (R-)
	-2	CAVITY WALL INSULATION (R-)
	-3	BUILDING INSULATION - UNFACED (R-)
	-4	BUILDING INSULATION - FACED (R-)
	-5	SILL SEALER
	-6	SAFING INSULATION
	-7	SPRAY-APPLIED CELLULOSIC INSULATION
	-8	SPRAY POLYURETHANE FOAM INSULATION
074213.19	-4	Z-FURRING (")
076200	-1	SHEET METAL FLASHING AND COUNTERFLASHING
	-2	PRE-FINISHED ROOF EDGE
	-3	PRE-FINISHED COPING
	-4	SHEET METAL REGLET
	-5	SHEET METAL GUTTER
	-6	SHEET METAL DOWNSPOUT
	-7	SHEET METAL SCUPPER
079200	-1	JOINT SEALANT - RAKE WHERE REQUIRED
	-2	JOINT FILLER
	-3	GASKET
	-4	BACKER ROD
079500	-1	EXPANSION CONTROL
081113	-1	HOLLOW METAL DOOR
	-2	HOLLOW METAL FRAME
	-3	FRAME ANCHOR
	-4	LOUVER
	-5	PLASTER GUARD
083323	-1	OVERHEAD COILING DOOR
084113	-1	ALUMINUM ENTRANCE DOOR
	-2	ALUMINUM STOREFRONT FRAME
088000	-1	GLAZING (AS SCHEDULED)
092216	-1	STEEL STUD (")
	-2	STEEL STUD RUNNER (")
	-3	FURRING CHANNEL
092900	-1	GYPSUM BOARD (")
	-2	FIRE RATED GYPSUM BOARD (")
	-3	CEMENTITIOUS TILE BACKER PANEL
	-4	METAL SUSPENSION SYSTEM
	-5	ACOUSTICAL SEALANT
	-6	ACOUSTICAL INSULATION (")
	-7	METAL EDGE TRIM
	-8	AUXILIARY SUPPORT FRAMING
	-9	METAL CONTROL JOINT
	-10	HIGH IMPACT GYPSUM BOARD
	-11	CONCRETE INTERIOR FINISHING COMPOUND
095113	-1	ACOUSTICAL PANEL ('X ') (F = FIRE RATED)
	-2	CEILING SUSPENSION SYSTEM
	-3	EDGE MOLD TRIM
	-4	AUXILIARY SUPPORT FRAMING
096466	-1	WOOD ATHLETIC FLOORING
	-2	SUBFLOOR SYSTEM
	-3	PERIMETER BASE
096513	-1	RESILIENT WALL BASE
	-2	EDGE STRIP
	-3	TACTILE WARNING SURFACE
	-4	RESILIENT STAIR TREAD
	-5	RESILIENT STAIR RISER
	-6	RESILIENT STRINGER SKIRT
	-7	RESILIENT STAIR NOSE
096723	-1	RESINOUS FLOORING
	-2	RESINOUS BASE
099113	-1	EXTERIOR PAINT
099123	-1	INTERIOR PAINT
101419	-1	DIMENSIONAL LETTER SIGNAGE
102113.15	-1	TOILET COMPARTMENT
	-2	URINAL SCREEN
102800	-1	SOAP DISPENSER
	-2	TISSUE DISPENSER
	-3	TOWEL DISPENSER
	-4	FRAMED MIRROR
	-5	SANITARY NAPKIN DISPENSER
	-6	SANITARY NAPKIN DISPOSER
	-7	GRAB BAR
	-8	WASTE RECEPTACLE
	-9	SHOWER SEAT
	-10	SHOWER CURTAIN ROD
	-11	COAT/ROBE HOOK
	-12	TOWEL BAR
	-13	SHOWER CURTAIN
	-14	DIAPER CHANGING STATION
	-15	ELECTRIC HAND DRYER REF. ELEC.)
104413	-1	FIRE EXTINGUISHER CABINET
105113	-1	CORRIDOR LOCKER
	-2	ATHLETIC LOCKER
	-3	LOCKER BENCH
116623	-1	BASKETBALL GOAL
	-2	SCOREBOARD
	-3	VOLLEYBALL STANDARD
	-4	FLOOR SLEEVE
	-5	WALL SAFETY PAD
	-6	MAT MOVER
116653	-1	ROLL UP DIVIDER CURTAIN
122113	-1	HORIZONTAL LOUVER BLINDS
123661	-1	SOLID SURFACE WINDOW SILL
126600	-1	TELESCOPING STANDS
133419	-1	PRE-ENGINEERED BUILDING
	-2	FRAME
	-3	COLUMN
	-4	GIRT
	-5	PURLIN
	-6	PREFINISHED WALL PANEL (I = INSULATED)
	-7	PREFINISHED ROOF PANEL
	-8	INSULATION (R-) (F = FACED)
	-9	PREFINISHED METAL GUTTER
	-10	PREFINISHED DOWNSPOUT
	-11	PREFINISHED METAL SOFFIT PANEL
	-12	PREFINISHED METAL FLASHING
	-13	METAL PANEL CLOSURE
	-14	BASE ANGLE
	-15	FRAMED OPENING HEADER OR JAMB CHANNEL
	-16	PREFINISHED INT. MTL. WALL PANEL
	-17	PREFINISHED PERFORATED INT. MTL. SOFFIT PANEL
312000	-1	EARTH MOVING
	-2	INTERIOR FILL
	-3	EXTERIOR FILL
	-4	GRANULAR DRAINAGE COURSE
	-5	DRAINAGE BACKFILL
	-5	SUBBASE COURSE
	-7	DRAINAGE GEOTEXTILE
	-8	SEPARATION GEOTEXTILE
321313	-1	CONCRETE PAVING
321373	-1	CONCRETE PAVING JOINT SEALANTS
329200	-1	TURF/GRASS

NOTE: REFER TO STRUCTURAL DRAWINGS FOR REINFORCING STEEL IN EXTERIOR WALLS AND CONCRETE NOT SHOWN

NOTE: REFER TO ALL DETAILS (DETAILS LOCATED ON THIS SHEET, PRECEEDING SHEETS AND FOLLOWING SHEETS) FOR APPLICABLE NOTES NOT SHOWN

NOTE: REFER TO ALL SECTIONS (SECTIONS LOCATED ON THIS SHEET, PRECEEDING SHEETS AND FOLLOWING SHEETS) FOR APPLICABLE NOTES NOT SHOWN

HTK ARCHITECTS PA
2900 SW MACVICAR AVE.
TOPEKA KANSAS 66611
P 785.266.5373
9300 W 110TH ST. STE. 150
OVERLAND PARK, KANSAS 66210
P 913.663.5373
www.htkarchitects.net

STATE OF MISSOURI
EDWARD FRA...
NUMBER A-8036
REGISTERED ARCHITECT
9/2/14

DATE:
- SEPTEMBER 2, 2014

REVISED DATE:

ROCK PORT R-2 - HIGH SCHOOL GYMNASIUM ADDITION

ROCK PORT R-2 SCHOOLS

ROCK PORT R-2 - ROCK PORT HIGH SCHOOL - 600 S. NEBRASKA ST., ROCK PORT, MO

SHEET CONTENTS:
- DETAILS

HTK PROJECT NUMBER:
- 1307.04-002

SHEET NUMBER:
A307

CONTRACT DOCUMENTS

9/2/2014 3:10:20 PM C:\Users\tjp\Documents\Rockport HS Gymnasium - 1307.04 - Central_tjp.rvt